COMe-bRP6 (E2)

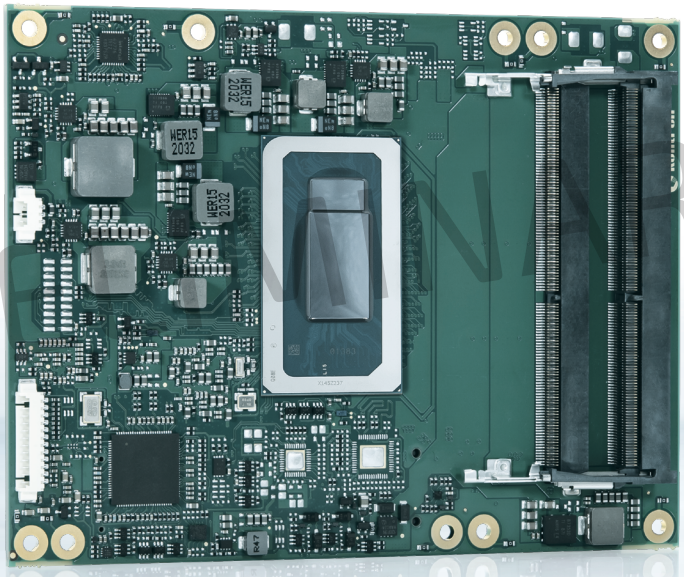

PRELIMINARY

COM Express® Basic Type 6 with 13th Generation Intel® Core™ Processors

- Up to 64 GByte DDR5 memory
- Up to 2.5 Gb Ethernet with TSN support
- Optional NVMe SSD onboard
- Industrial grade versions

POSSIBILITIES START HERE kontron

TECHNICAL INFORMATION

COMPLIANCE	COM Express® Basic Pin-out Type 6
DIMENSIONS (H x W)	125 x 95 mm
CPU	Intel® 13th Generation Core™ family For details see table (CPU variants) given below
CHIPSET	Integrated SoC
MAIN MEMORY	2x DDR5 SO-DIMM with up to 32 GByte per channel (non-ECC)
GRAPHICS CONTROLLER	Intel® Iris® Xe Graphics on i7/i5 processors Intel® UHD Graphics on i3/Celeron® processors
ETHERNET CONTROLLER	Intel® I226LM/I226IT
ETHERNET	Up to 2.5Gb Ethernet with TSN support (depending on SKU)
STORAGE	2x SATA 6Gb/s
FLASH ONBOARD	Up to 1 TByte NVMe SSD (on request)
PCI EXPRESS®	5x PCIe 3.0 (On request: 6x without Ethernet, up to 8x without Ethernet & SATA or alternatively 8x with additional PCIe Switch) 2x4 PCIe 4.0 on PEG Lanes #0-7 1x8 PCIe 4.0 on PEG Lanes #8-15 (depending on SKU)
DISPLAY	DDI1: DP++, DDI2: DP++, DDI3: DP++, VGA: -, LVDS: Dual Channel 18/24bit
USB	4x USB 3.2 Gen2 (incl. USB 2.0) + 4x USB 2.0
SERIAL	2x serial interface (RX/TX only)
AUDIO	High Definition Audio interface
OTHER FEATURES	(G) SPI, LPC, SMB, Fast I²C, Staged Watchdog, RTC
SPECIAL FEATURES	POSCAP capacitors, Trusted Platform Module TPM 2.0
FEATURES ON REQUEST	vPRO (AMT/TXT/AES Support), eDP instead of LVDS, USB-C, up to 3x PCIe x1 additional w/o Ethernet & SATA, NVMe SSD, Fail Safe via 2nd SPI Flash
POWER MANAGEMENT	ACPI 6.0
POWER SUPPLY	8.5 V – 20 V Wide Range, Single Supply Power
BIOS	AMI Aptio V
OPERATING SYSTEM	Windows®10, Linux, VxWorks (project based)
TEMPERATURE	Commercial temperature: 0 °C to +60 °C operating, -30 °C to +85 °C non-operating Industrial temperature: -40 °C to +85 °C operating, -40 °C to +85 °C non-operating
HUMIDITY	93 % relative Humidity at 40 °C, non-condensing (according to IEC 60068-2-78)

PRELIMINARY

BLOCK DIAGRAM

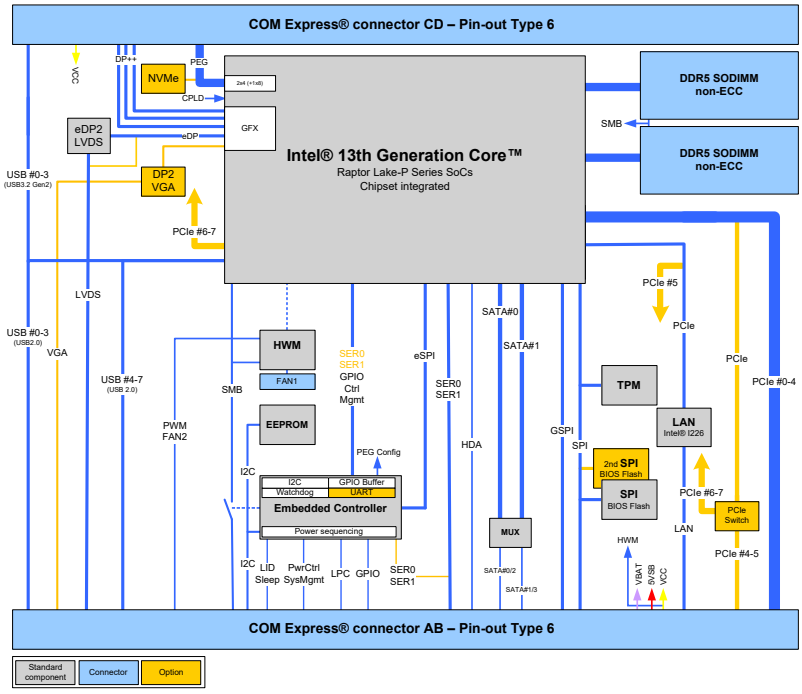

CPU VARIANTS

	13TH GEN RAPTOR LAKE H-SERIES EMBEDDED (45 W)		
CPU	i7-13800HE	i5-13600HE	i3-13300HE
CORES	14	12	8
NUMBER OF P-CORES	6	4	4
FREQUENCY BASE /TURBO (P-CORES)	2.5/5.0 GHz	2.7/4.8 GHz	2.1/4.6 GHz
NUMBER OF E-CORES	8	8	4
FREQUENCY BASE /TURBO (E-CORES)	1.8/4.0 GHz	1.9/3.6 GHz	1.5/3.4 GHz
TDP	45/35 W	45/35 W	45/35 W
CACHE	24 MByte	18 Mbyte	12 Mbyte
IBECC	no	no	no
TCC/TSN	no	no	no

	13TH GEN RAPTOR LAKE H-SERIES INDUSTRIAL (45 W)		
CPU	i7-13800HRE	i5-13600HRE	i3-13300HRE
CORES	14	12	8
NUMBER OF P-CORES	6	4	4
FREQUENCY BASE /TURBO (P-CORES)	2.5/5.0 GHz	2.7/4.8 GHz	2.1/4.6 GHz
NUMBER OF E-CORES	8	8	4
FREQUENCY BASE /TURBO (E-CORES)	1.8/4.0 GHz	1.9/3.6 GHz	1.5/3.4 GHz
TDP	45/35 W	45/35 W	45/35 W
CACHE	24 MByte	18 Mbyte	12 Mbyte
IBECC	yes	yes	yes
TCC/TSN	yes	yes	yes

PRELIMINARY

	13TH GEN RAPTOR LAKE P-SERIES EMBEDDED (28 W)		
CPU	i7-1370PE	i5-1350PE	i3-1320PE
CORES	14	12	8
NUMBER OF P-CORES	6	4	4
FREQUENCY BASE /TURBO (P-CORES)	1.9/4.8 GHz	1.8/4.6 GHz	1.7/4.5 GHz
NUMBER OF E-CORES	8	8	4
FREQUENCY BASE /TURBO (E-CORES)	1.2/3.7 GHz	1.3/3.4 GHz	1.2/3.3 GHz
TDP	28/20 W	28/20 W	28/20 W
CACHE	24 MByte	12 Mbyte	12 Mbyte
IBECC	no	no	no
TCC/TSN	no	no	no

	13TH GEN RAPTOR LAKE P-SERIES INDUSTRIAL (28 W)		
CPU	i7-1370PRE	i5-1350PRE	i3-1320PRE
CORES	14	12	8
NUMBER OF P-CORES	6	4	4
FREQUENCY BASE /TURBO (P-CORES)	1.9/4.8 GHz	1.8/4.6 GHz	1.7/4.5 GHz
NUMBER OF E-CORES	8	8	4
FREQUENCY BASE /TURBO (E-CORES)	1.2/3.7 GHz	1.3/3.4 GHz	1.2/3.3 GHz
TDP	28/20 W	28/20 W	28/20 W
CACHE	24 MByte	12 Mbyte	12 Mbyte
IBECC	yes	yes	yes
TCC/TSN	yes	yes	yes

VARIANTS

PART NO.	CPU	PCH	MEM. DOWN	SO-DIMM	FLASH	OP. TEMPERATURE
38040-0000-XX-7	i7-13800HE	-	-	non-ECC	-	0 °C – 60 °C
38040-0000-XX-5	i5-13600HE	-	-	non-ECC	-	0 °C – 60 °C
38040-0000-XX-3	i3-13300HE	-	-	non-ECC	-	0 °C – 60 °C
38040-0000-XX-7	i7-1370PE	-	-	non-ECC	-	0 °C – 60 °C
38040-0000-XX-5	i5-1350PE	-	-	non-ECC	-	0 °C – 60 °C
38040-0000-XX-3	i3-1320PE	-	-	non-ECC	-	0 °C – 60 °C
38041-0000-XX-7	i7-13800HRE	-	-	non-ECC	-	-40 °C – 85 °C
38041-0000-XX-5	i5-13600HRE	-	-	non-ECC	-	-40 °C – 85 °C
38041-0000-XX-3	i3-13300HRE	-	-	non-ECC	-	-40 °C – 85 °C
38041-0000-XX-7	i7-1370PRE	-	-	non-ECC	-	-40 °C – 85 °C
38041-0000-XX-5	i5-1350PRE	-	-	non-ECC	-	-40 °C – 85 °C
38041-0000-XX-3	i3-1320PRE	-	-	non-ECC	-	-40 °C – 85 °C

CARRIER

ARTICLE	PART NO.	DESCRIPTION
COME EVAL CARRIER2 T6	38116-0000-00-5	COM Express® Evaluation Carrier Type 6

COOLING

ARTICLE	PART NO.	DESCRIPTION
HSP COME-BRP6 CU-CORE THREADED	38040-0000-99-0	Heatspreader for COM-bRP6, Cu-core, threaded mounting holes
HSP COME-BRP6 CU-CORE THROUGH	38040-0000-99-1	Heatspreader for COM-bRP6, Cu-core, through mounting holes
HSK COME-BASIC ACTIVE (W/O HSP)	38025-0000-99-0C05	Active Cooler for COMe-bxL6/bDV7 to be mounted on HSP
HSK COME-BASIC PASSIVE (W/O HSP)	38025-0000-99-0C06	Passive Cooler for COMe-bxL6/bDV7 to be mounted on HSP

MEMORY

ARTICLE	MIN. SPEC.	SIZE	ECC	OP. TEMPERATURE
97040-3248-BRP6	DDR5-4800	32 GByte	no	0 °C – 60 °C
97040-1648-BRP6	DDR5-4800	16 GByte	no	0 °C – 60 °C
97040-0848-BRP6	DDR5-4800	8 GByte	no	0 °C – 60 °C
97041-3248-BRP6	DDR5-4800	32 GByte	no	-40 °C – 85 °C
97041-1648-BRP6	DDR5-4800	16 GByte	no	-40 °C – 85 °C
97041-0848-BRP6	DDR5-4800	8 GByte	no	-40 °C – 85 °C

GLOBAL HEADQUARTERS

Kontron Europe GmbH

Gutenbergstraße 2
85737 Ismaning, Germany
Tel.: + 49 821 4086-0
Fax: + 49 821 4086-111
info@kontron.com

www.kontron.com

PRELIMINARY

Copyright © 2022 Kontron. All rights reserved. All data is for information purposes only and not guaranteed for legal purposes. Information has been carefully checked and is believed to be accurate; however, no responsibility is assumed for inaccuracies. Kontron and the Kontron logo and all other trademarks or registered trademarks are the property of their respective owners and are recognized. Specifications are subject to change without notice. COMe-bRP6 E2-20221214 - bmy