Single Board Computer

SBC-C41-pITX

Pico-ITX SBC with the Intel® Atom™ X Series, Intel® Celeron® J / N Series and Intel® Pentium® N Series (formerly Apollo Lake) Processors

x86 solution designed for IoT edge computing in harsh environments

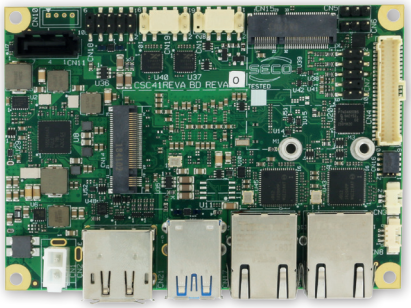

DEVELOPMENT SAMPLING PRODUCTION

HIGHLIGHTS

CPU
Intel® Atom™ X Series, Intel® Celeron® J / N Series and Intel® Pentium® N Series (formerly Apollo Lake) Processors

CONNECTIVITY
2x GbE; M.2 WWAN and WLAN slots; 8x GPI/Os

GRAPHICS
Integrated Intel® HD Graphics 500 series controller with up to 18 Execution Units

MEMORY
Up to 8GB LPDDR4 memory

Available in Industrial Temperature Range

intel IoT Solutions Alliance

Windows 10 Enterprise · Windows IoT · Wind River Partner Program PLATINUM · Linux · yocto PROJECT · android

MAIN FIELDS OF APPLICATION

Edge Computing · Industrial Automation and Control · Info Kiosks · Internet of Things · Surveillance · Telco · Transportation

FEATURES

Processor	Intel® Atom™ **x5-E3930** Dual Core @1.3 GHz (Burst 1.8GHz), 2MB L2 Cache, 6.5W TDP Intel® Atom™ **x5-E3940** Quad Core @1.6 GHz (Burst 1.8GHz), 2MB L2 Cache, 9.5W TDP Intel® Atom™ **x7-E3950** Quad Core @1.6 GHz (Burst 2.0GHz), 2MB L2 Cache, 12W TDP Intel® Pentium® **N4200** Quad Core @1.1GHz (Burst 2.5GHz), 2MB L2 Cache, 6W TDP Intel® Celeron® **N3350** Dual Core @1.1GHz (Burst 2.4GHz), 2MB L2 Cache, 6W TDP Intel® Celeron® **J3455**, Quad Core @1.5GHz (Burst 2.3GHz), 2MB L2Cache, 10W TDP Intel® Celeron® **J3355**, Dual Core @2.0GHz (Burst 2.5GHz), 2MB L2Cache, 10W TDP
Max Cores	4
Max Thread	4
Memory	32-bit Single-/Dual-/Quad-Channel LPDDR4 soldered on-board, up to 2400 MT/s Max memory size 8GB
Graphics	Integrated Intel® HD Graphics 500 series controller with up to 18 Execution Units HW decoding of HEVC(H.265), H.264, VP8, VP9, MPEG2, VC-1, WMV9, JPEG/MJPEG formats HW encoding of HEVC(H.265), H.264, MVC, VP8, VP9 and JPEG/MPEG formats Three independent display support
Video Interfaces	HDMI connector Optional DP++ connector (combo with HDMI) LVDS connector
Video Resolution	HDMI: up to 3840x2160 @ 30Hz DP++: up to 4096x2160 @ 60Hz LVDS: up to 1920x1200 @ 60Hz
Mass Storage	Optional eMMC 5.0 drive on-board SATA Gen3 7p M connector SSD M.2 Socket 2 Key B lot, size 2242 / 3042 (excludes WWAN modules) microSD Card slot (combo with miniSIM slot)
Networking	Dual Gigabit Ethernet connector WWAN (modem) M.2 Socket 2 Key B 2242 / 3042 slot (excludes SSD interface) Connectivity M.2 Socket 1 Key E 2230 Slot for WiFi+BTLE modules
USB	USB 3.0 Dual Type-A connector Internal USB 2.0 Dual pin header
Audio	HD Audio Codec Line Out + Microphone + S/PDIF Out interfaces on internal pin header
Serial Ports	2 x RS-232/RS-422/RS-485 Serial ports on internal pin header
Other Interfaces	miniSIM slot for M.2 modems (combo with microSD slot) 8 x GPI/Os connector FAN connector Switch / LED Front Header connector I2C + INT# + RST# signals for I2C Touch Screen controller on LVDS connector Optional TPM 2.0 on-board
Power Supply	$+12V_{DC}$ Cabled coin cell battery for RTC
Operating System	Windows 10 Enterprise (64-bit) Windows 10 IoT Core (32- / 64-bit) WindRiver Linux 64-bit Yocto (64-bit) Android (planning)
Operating Temperature*	0°C ÷ +60°C (Commercial version) -40°C ÷ +85°C (industrial version)
Dimensions	100 x 72 mm (3,93" x 2,83")

*Measured at any point of SECO standard heatspreader for this product, during any and all times (including start-up). Actual temperature will widely depend on application, enclosure and/or environment. Upon customer to consider application-specific cooling solutions for the final system to keep the heatspreader temperature in the range indicated.

Information subject to change. Please visit www.seco.com to find the latest version of this datasheet

SBC-C41-pITX

Pico-ITX SBC with the Intel® Atom™ X Series, Intel® Celeron® J / N Series and Intel® Pentium® N Series (formerly Apollo Lake) Processors

BLOCK DIAGRAM

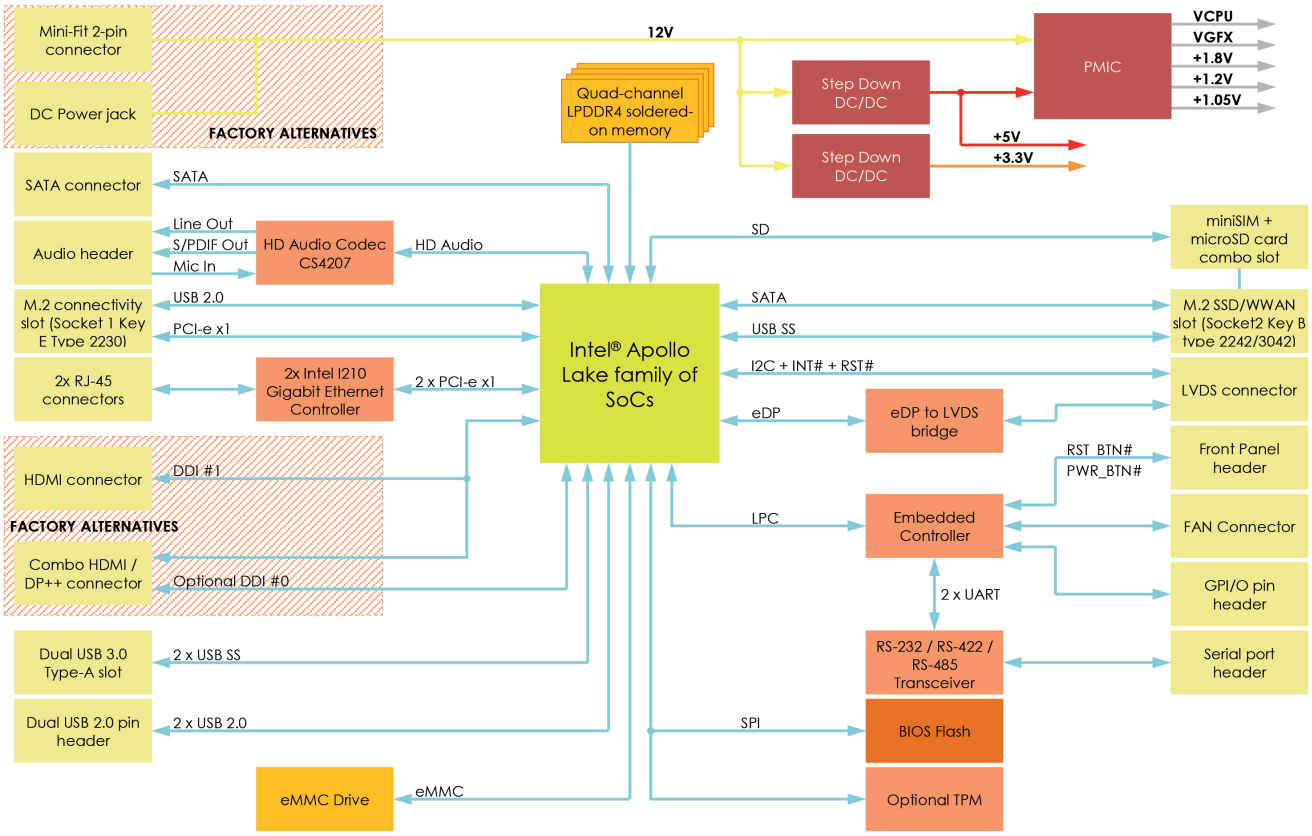

ORDERING INFORMATION

PN*	DESCRIPTION
SC41-3441-1311-I0	SBC - Intel Atom E3930 "Apollo lake" (2M Cache, up to 1.80 GHz) / TDP 6.5 W,2GB RAM double channel, eMMC 32GB, power supply minifit 2x1, serial ports, HDA, TPM, 2 i210 Eth, HDMI - Ind. Temp
SC41-4741-1312-I0	SBC - Intel Atom E3940 "Apollo lake" (2M Cache, up to 1.80 GHz) / TDP 9.5 W,4GB RAM quad channel, eMMC 32GB, power supply minifit 2x1, serial ports, HDA, TPM, 2 i210 Eth, HDMI + DP++ - Ind. Temp
SC41-1441-1311-C0	SBC - Intel Celeron N3350 "Apollo lake" (2M Cache, up to 2.40 GHz) / TDP 6 W,2GB RAM double channel, eMMC 32GB, power supply minifit 2x1, serial ports, HDA, TPM, 2 i210 Eth, HDMI - Com. Temp
SC41-5841-1312-I0	SBC - Intel Atom E3950 "Apollo lake" (2M Cache, up to 2.00 GHz) / TDP 12 W,6GB RAM quad channel, eMMC 32GB, power supply minifit 2x1, serial ports, HDA, TPM, 2 i210 Eth, HDMI + DP++ - Ind. Temp
SC41-2741-1312-C0	SBC - Intel Pentium N4200 "Apollo lake" (2M Cache, up to 2.50 GHz) / TDP 6 W,4GB RAM quad channel, eMMC 32GB, power supply minifit 2x1, serial ports, HDA, TPM, 2 i210 Eth, HDMI + DP++ - Com. Temp

*Additional configurations may be available. Please inquire for more information.

Information subject to change. Please visit www.seco.com to find the latest version of this datasheet